PHILIPS

SmartBright All-in Floodlight

BVP158



Reliable, Energy saving LED Floodlight, CCT Selectable

The SmartBright All-in Floodlight comes with a compact and sturdy design. It’s a new range with robust die-cast aluminum housing suitable for general outdoor application. CCT selectable is involved that is more convenient for customers’ different requirements, saving more time for product selection.

Benefits

- A wide range of applications
- Reliable quality and performance
- Outstanding energy savings
- Easy to install & adjust
- Easier for stock management

Applications

- Warehouses
- Landscape
- Arena and Sports
- Architectural light
- Billboard
- Parking area lighting
- Amenity

Features

- CCT selectable: Warm White (WW), Neutral White (NW) and Cool White (CW) in one package
- Power: 10W, 20W, 30W, 50W, 70W, 100W, 150W and 200W
- Input voltage: 220V-240V
- Lumen efficacy up to 120lm/w
- Working temperature: -25℃ to +40℃
- 50khrs life

Versions



SMARTBRIGHT ALL-IN FLOODLIGHT



SMARTBRIGHT ALL-IN FLOODLIGHT



SMARTBRIGHT ALL-IN FLOODLIGHT



SMARTBRIGHT ALL-IN FLOODLIGHT



SMARTBRIGHT ALL-IN FLOODLIGHT



SMARTBRIGHT ALL-IN FLOODLIGHT



SMARTBRIGHT ALL-IN FLOODLIGHT



SMARTBRIGHT ALL-IN FLOODLIGHT

Dimensional drawing

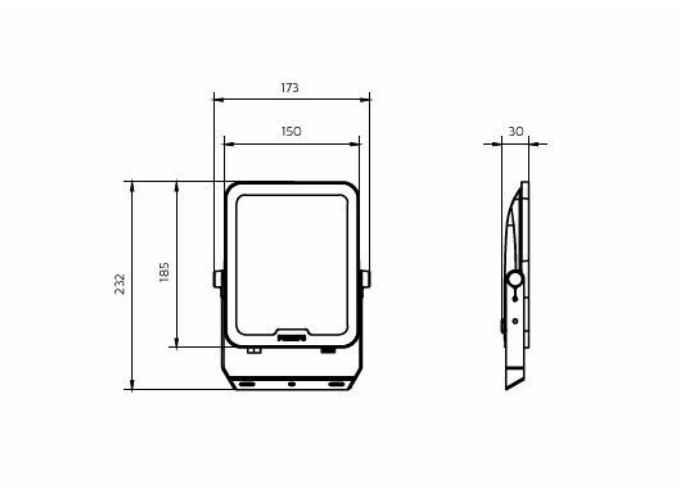

BVP158 LED60/WW_NW_CW PSU 50W SWB GM

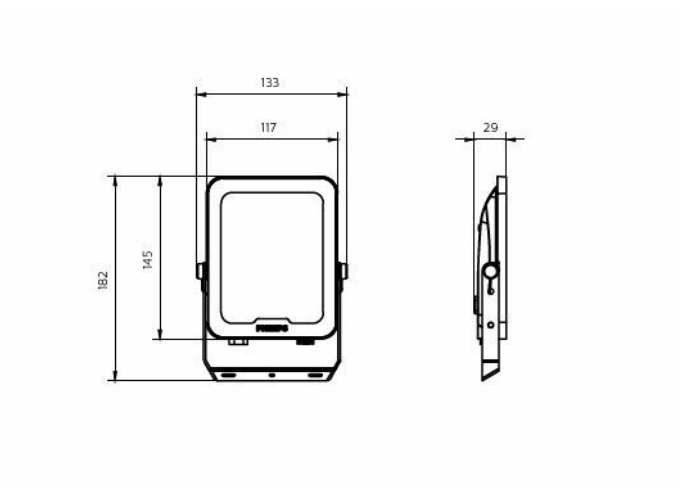

BVP158 LED36/WW_NW_CW PSU 30W SWB GM

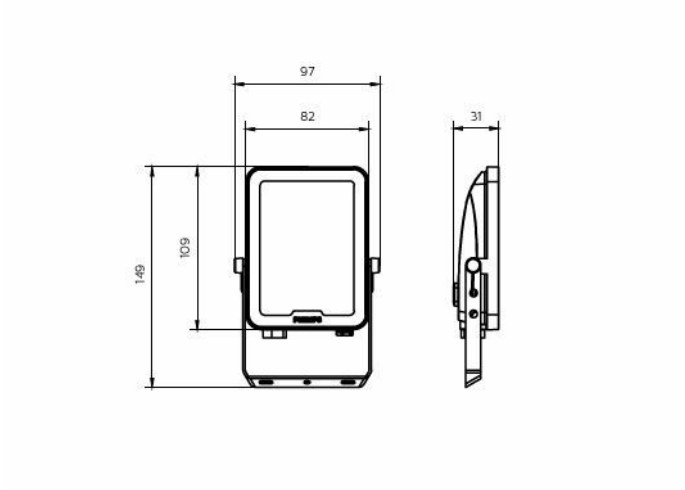

BVP158 LED24/WW_NW_CW PSU 20W SWB GM

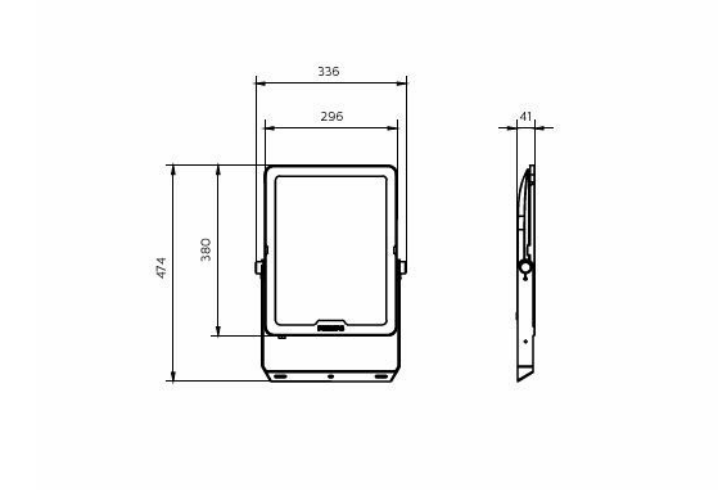

BVP158 LED240/WW_NW_CW PSU 200W SWB GM

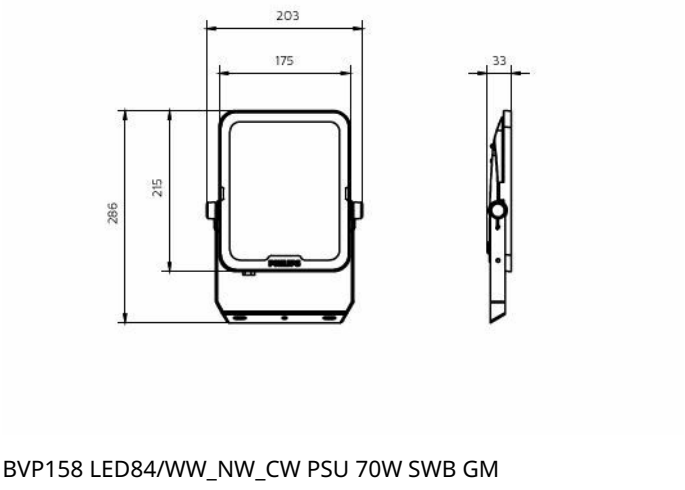

BVP158 LED84/WW_NW_CW PSU 70W SWB GM

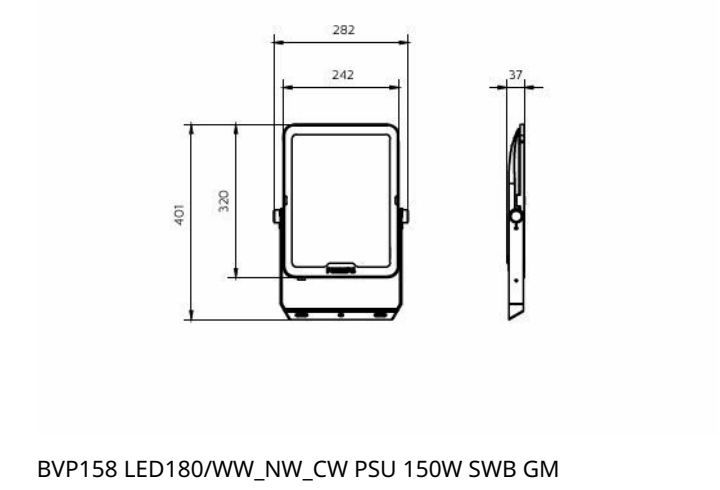

BVP158 LED180/WW_NW_CW PSU 150W SWB GM

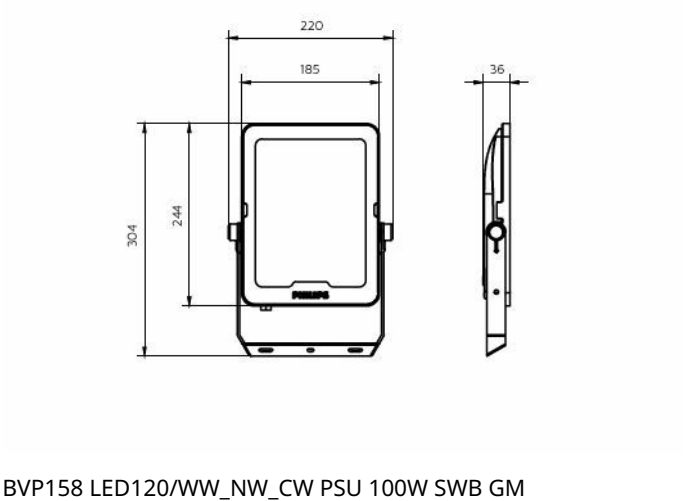

BVP158 LED120/WW_NW_CW PSU 100W SWB GM

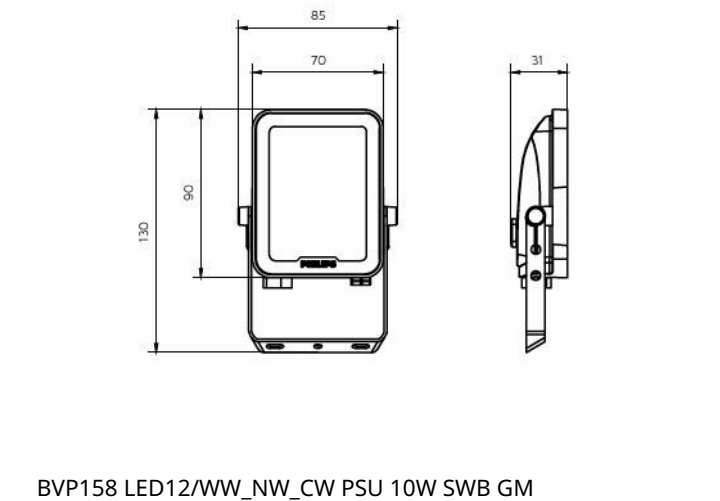

BVP158 LED12/WW_NW_CW PSU 10W SWB GM

Product details



BVP158 CCT switch

General Information

Number of gear units	1 unit
Gear	-
Driver included	Yes

Light Technical

Color rendering index (CRI)	80
Number of light sources	1
Light source color	3000K/4200K/6500K
Luminaire light beam spread	110°

Controls and Dimming

Dimmable	No
Maximum dim level	Not applicable

Mechanical and Housing

Housing Color	Grey
Ingress protection code	IP65 [Dust penetration-protected, jet-proof]
Optical cover type	Glass

Approval and Application

Glow-wire test	Temperature 650 °C, duration 30 s
Flammability mark	For mounting on normally flammable surfaces
CE mark	No

Light Technical

Order Code	Full Product Name	Luminous Flux	Correlated Color Temperature (Nom)
911401875286	BVP158 LED84/WW_NW_CW PSU 70W SWB GM	7,700 lm 8,400 lm	3000 K 4200 K 6500 K
911401873286	BVP158 LED36/WW_NW_CW PSU 30W SWB GM	3,300 lm 3,600 lm	3000 K 4200 K 6500 K
911401871286	BVP158 LED12/WW_NW_CW PSU 10W SWB GM	1,100 lm 1,200 lm	3000 K 4200 K 6500 K
911401877286	BVP158 LED180/WW_NW_CW PSU 150W SWB GM	16,500 lm 18,000 lm	3000 K 4200 K 6500 K
911401876286	BVP158 LED120/WW_NW_CW PSU 100W SWB GM	11,000 lm 12,000 lm	3000 K 4200 K 6500 K
911401878286	BVP158 LED240/WW_NW_CW PSU 200W SWB GM	22,000 lm 24,000 lm	3000 K 4200 K 6500 K
911401874286	BVP158 LED60/WW_NW_CW PSU 50W SWB GM	5,500 lm 6,000 lm	3000 K 4200 K 6500 K
911401872286	BVP158 LED24/WW_NW_CW PSU 20W SWB GM	2,200 lm 2,400 lm	3000 K 4200 K 6500 K

Operating and Electrical

Order Code	Full Product Name	Power Consumption
911401875286	BVP158 LED84/WW_NW_CW PSU 70W SWB GM	70 W
911401873286	BVP158 LED36/WW_NW_CW PSU 30W SWB GM	30 W
911401871286	BVP158 LED12/WW_NW_CW PSU 10W SWB GM	10 W
911401877286	BVP158 LED180/WW_NW_CW PSU 150W SWB GM	150 W
911401876286	BVP158 LED120/WW_NW_CW PSU 100W SWB GM	100 W
911401878286	BVP158 LED240/WW_NW_CW PSU 200W SWB GM	200 W
911401874286	BVP158 LED60/WW_NW_CW PSU 50W SWB GM	50 W
911401872286	BVP158 LED24/WW_NW_CW PSU 20W SWB GM	20 W

Mechanical and Housing

Order Code	Full Product Name	Mech. impact protection code
911401875286	BVP158 LED84/WW_NW_CW PSU 70W SWB GM	IK08
911401873286	BVP158 LED36/WW_NW_CW PSU 30W SWB GM	IK07
911401871286	BVP158 LED12/WW_NW_CW PSU 10W SWB GM	IK07
911401877286	BVP158 LED180/WW_NW_CW PSU 150W SWB GM	IK08
911401876286	BVP158 LED120/WW_NW_CW PSU 100W SWB GM	IK08
911401878286	BVP158 LED240/WW_NW_CW PSU 200W SWB GM	IK08
911401874286	BVP158 LED60/WW_NW_CW PSU 50W SWB GM	IK07
911401872286	BVP158 LED24/WW_NW_CW PSU 20W SWB GM	IK07

© 2026 Signify Holding. All rights reserved. The information provided herein is subject to change, without notice. Signify does not give any representation or warranty as to the accuracy or completeness of the information included herein and shall not be liable for any action in reliance thereon. The information presented in this document is not intended as any commercial offer and does not form part of any quotation or contract, unless otherwise agreed by Signify. Philips and the Philips Shield Emblem are registered trademarks of Koninklijke Philips N.V.